VANICO MARONYX

MINI CONSOLE QUARTZ

CONSOLE
AND MIRROR

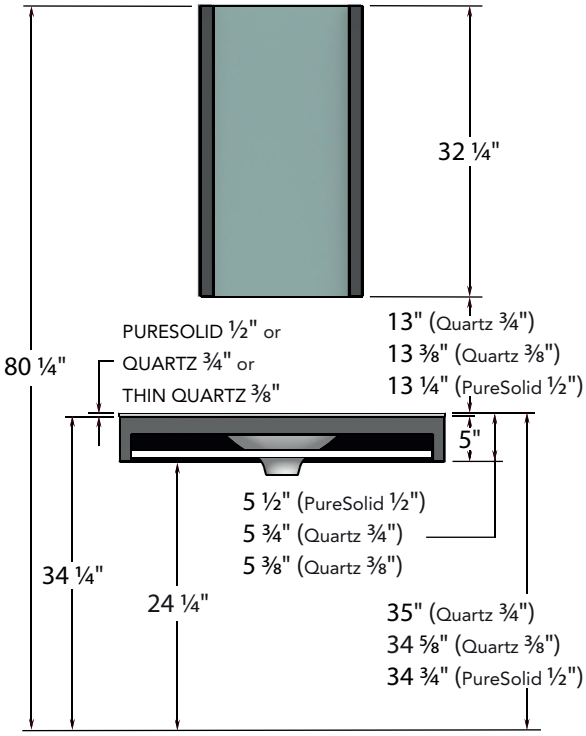

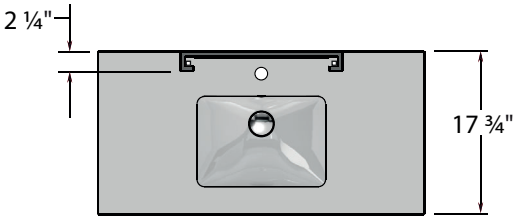

RECESSED MEDICINE CABINET

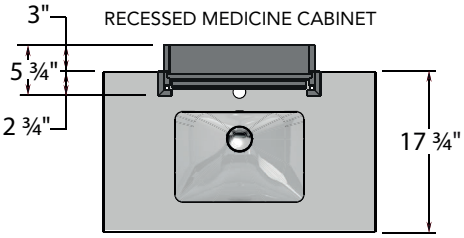
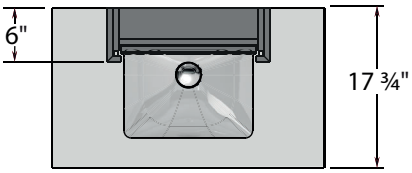
WALL-MOUNT MED. CABINET